flexiforce FF
innovations for overhead doors

650SNR Snapper

Images:

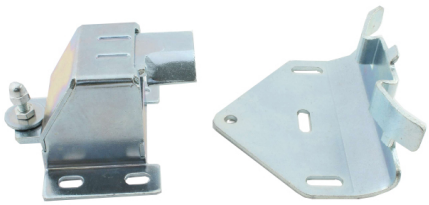

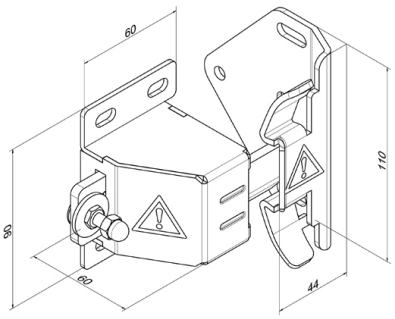

Description:

- Subcategory	: 04. Others
- IND/RES	: RES
- Full package quantity	: 10
- Unit	: piece (1)
- Weight / Unit	: 0,7kg
- Material	: Galvanised Steel
- Product Family	: a 039
- Marking	: FF
- Commercial description	: galvanised, right
- Technical description	: Based on the current CE-regulations for overhead doors we have developed new, CE safe snappers. Springed functioning, moves freely to prevent fingers from crushing. Supplied pre-assembled, so easier to install. Latch on panel, strike on track/angle.